mm [inch]

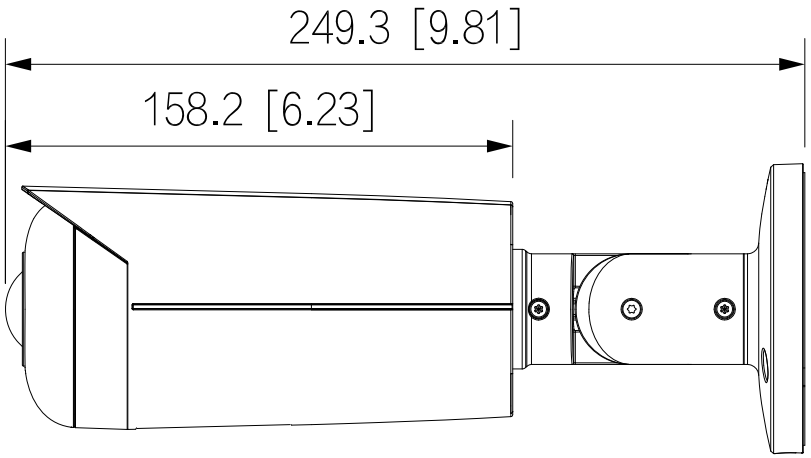
249.3 [9.81]
158.2 [6.23]

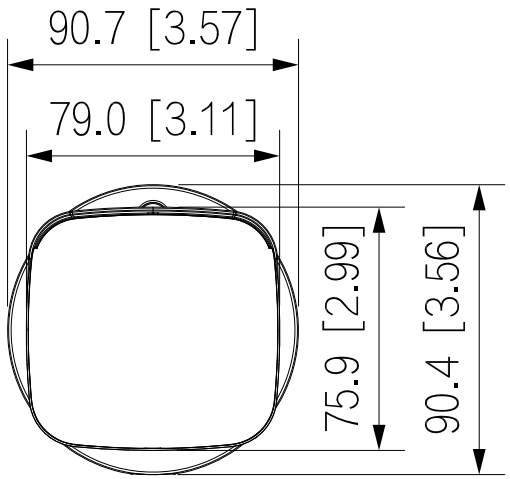
90.7 [3.57]
79.0 [3.11]
75.9 [2.99]
90.4 [3.56]

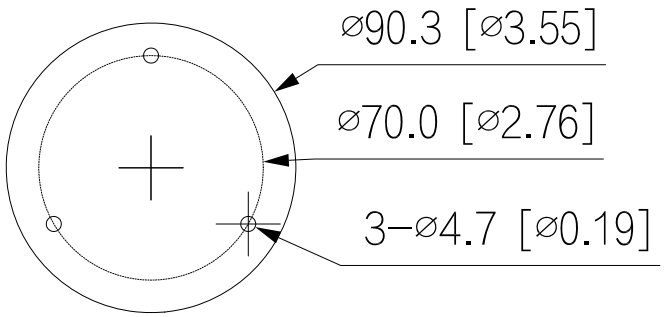
⌀90.3 [⌀3.55]
⌀70.0 [⌀2.76]
3–⌀4.7 [⌀0.19]