mm [inch]

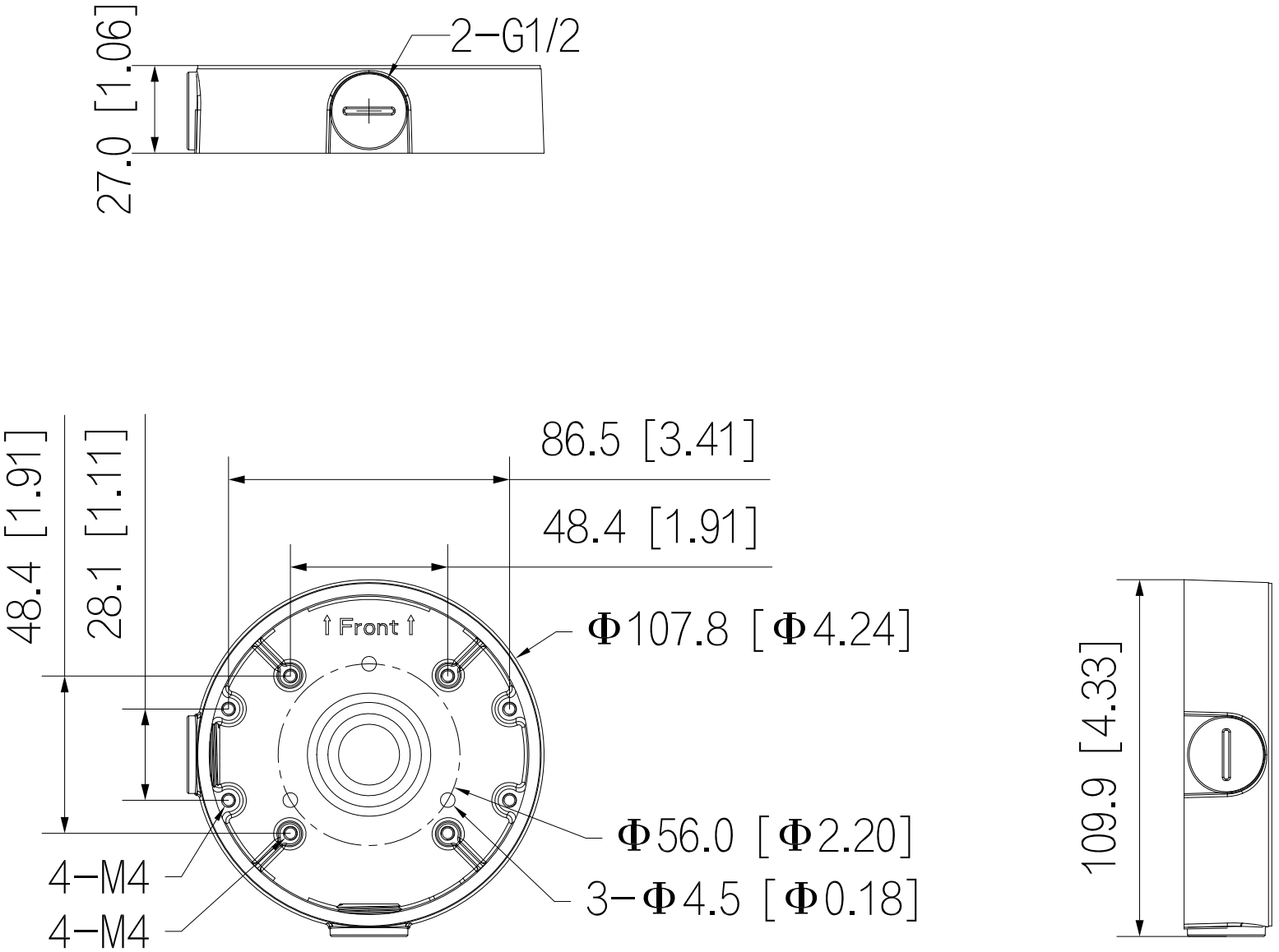
2−G1/2
27.0 [1.06]
86.5 [3.41]
48.4 [1.91]
48.4 [1.91]
28.1 [1.11]
⇑ Front ⇑
Φ107.8 [Φ4.24]
Φ56.0 [Φ2.20]
3−Φ4.5 [Φ0.18]
4−M4
4−M4
109.9 [4.33]