mm [inch]

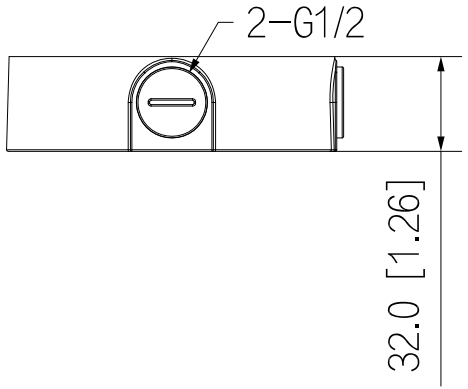
2-G1/2
32.0 [1.26]

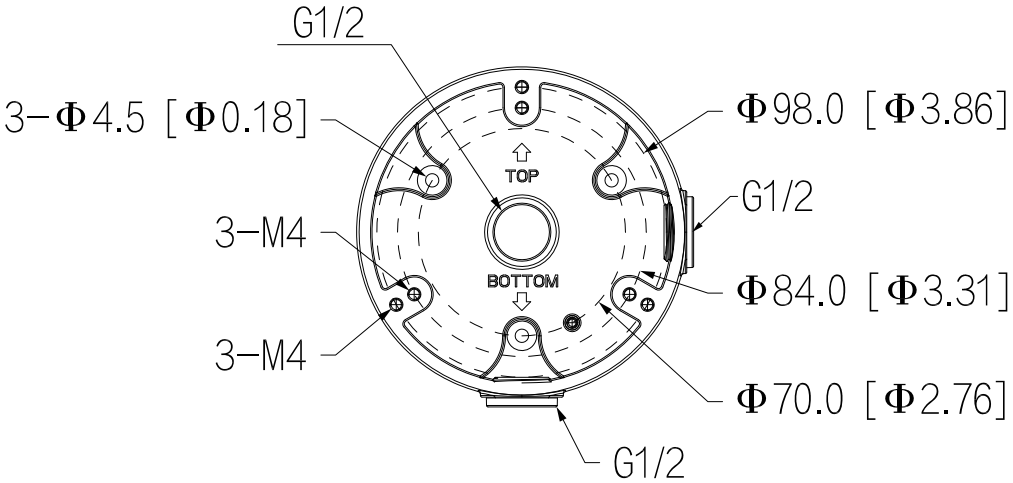
G1/2
3-Φ4.5 [Φ0.18]
3-M4
3-M4
TOP
BOTTOM
Φ98.0 [Φ3.86]
G1/2
Φ84.0 [Φ3.31]
Φ70.0 [Φ2.76]
G1/2

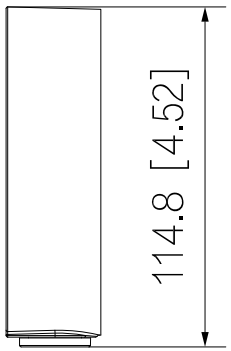
114.8 [4.52]