mm [inch]

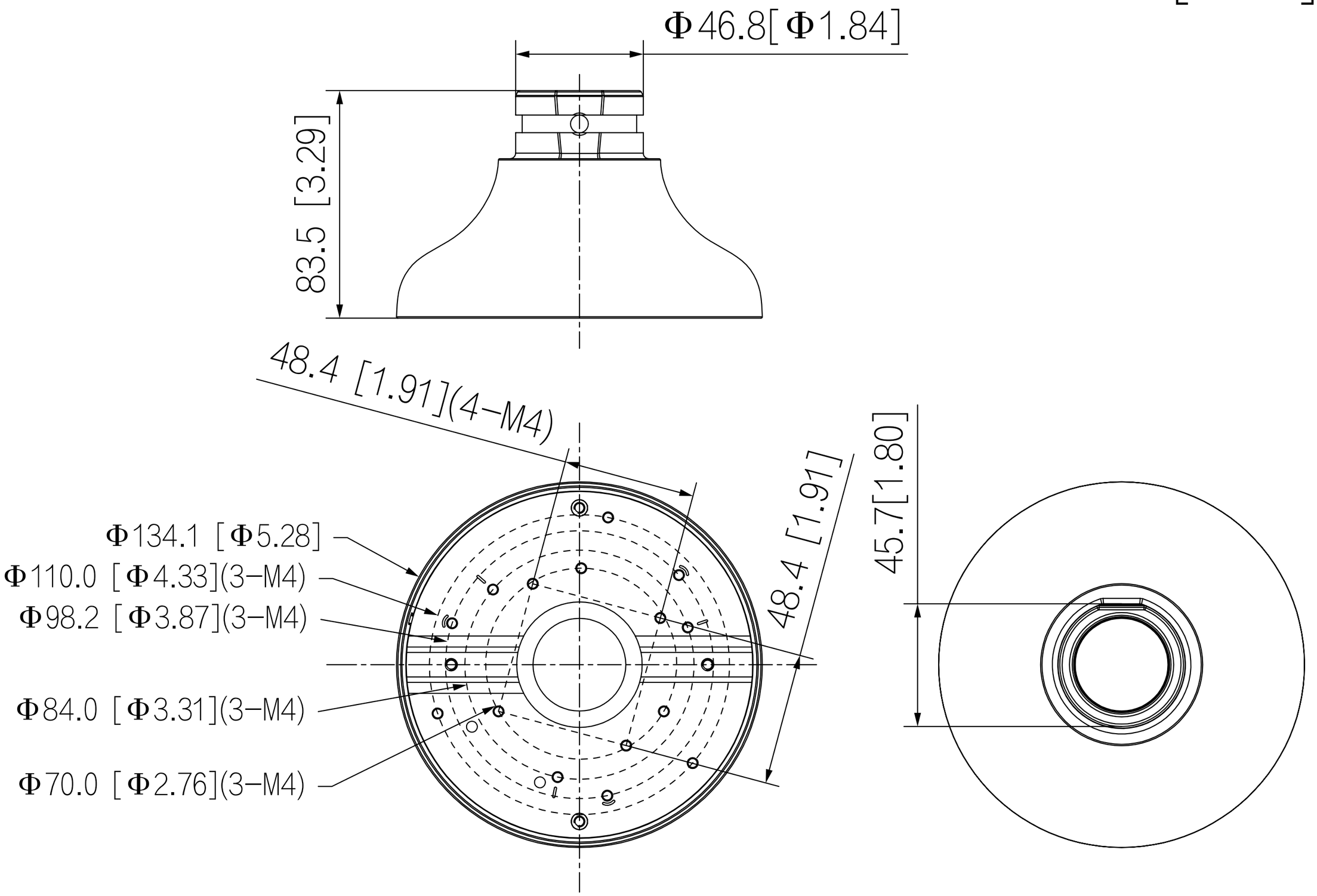
Φ46.8[Φ1.84]
83.5 [3.29]
48.4 [1.91](4−M4)
Φ134.1 [Φ5.28]
Φ110.0 [Φ4.33](3−M4)
Φ98.2 [Φ3.87](3−M4)
Φ84.0 [Φ3.31](3−M4)
Φ70.0 [Φ2.76](3−M4)
48.4 [1.91]
45.7[1.80]