mm [inch]

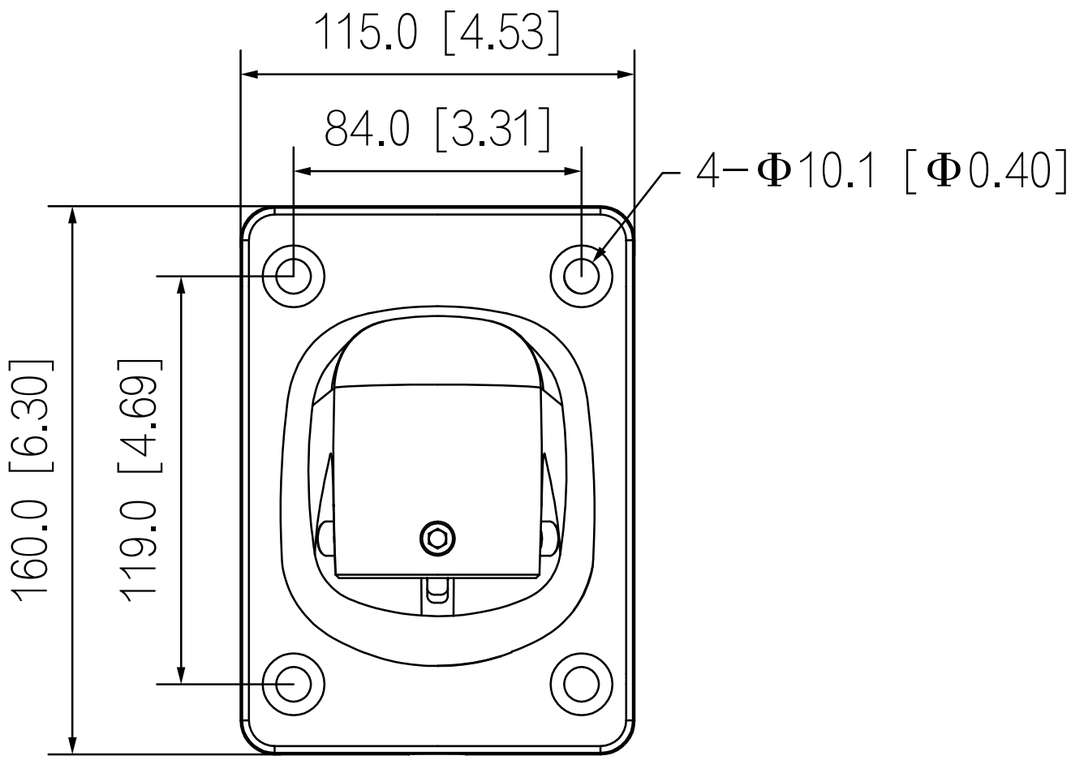
115.0 [4.53]
84.0 [3.31]
4−Φ10.1 [Φ0.40]
160.0 [6.30]
119.0 [4.69]

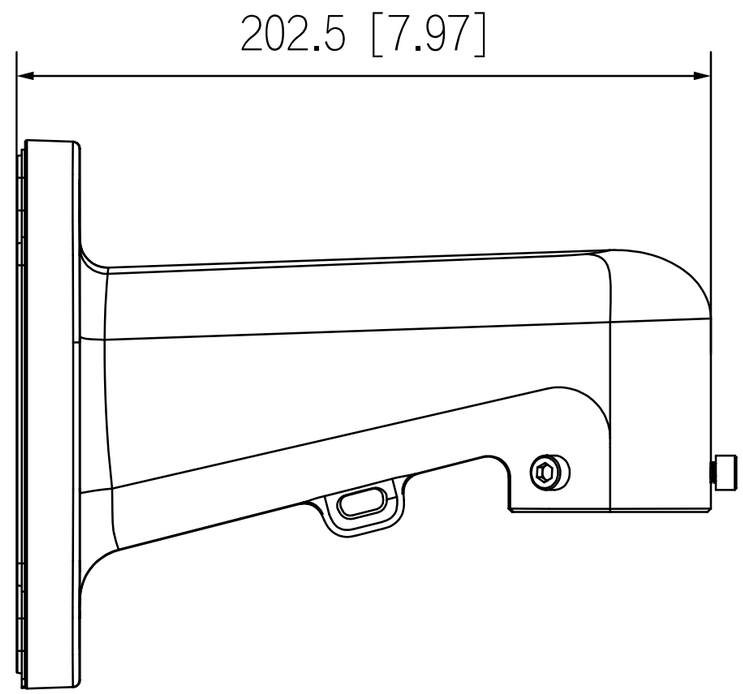
202.5 [7.97]

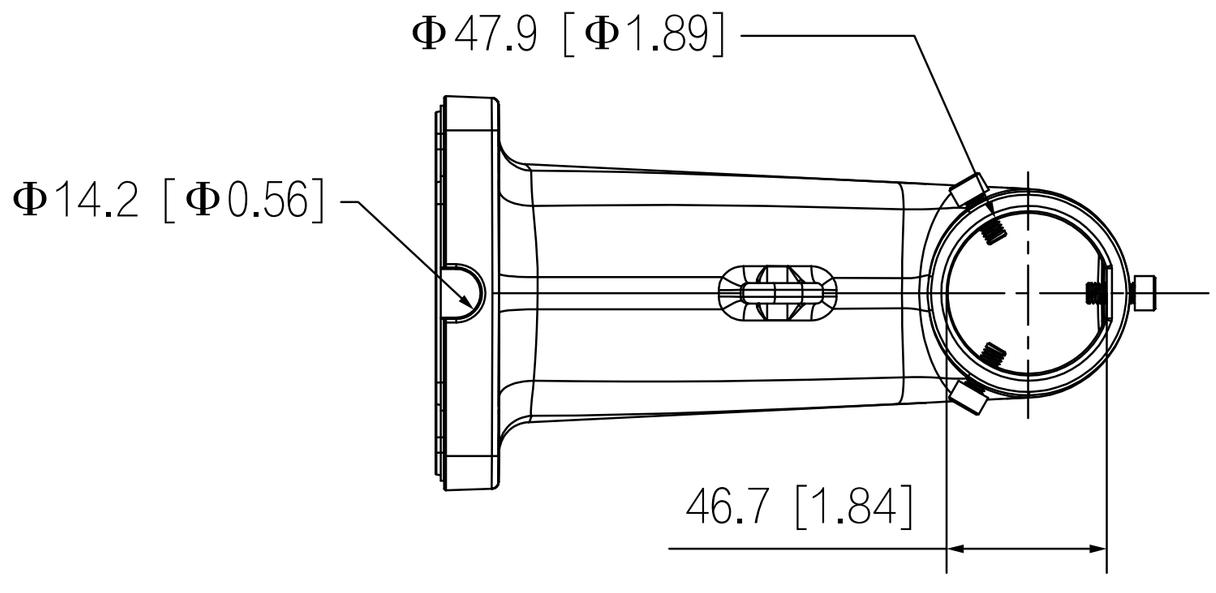
Φ47.9 [Φ1.89]
Φ14.2 [Φ0.56]
46.7 [1.84]