mm [inch]

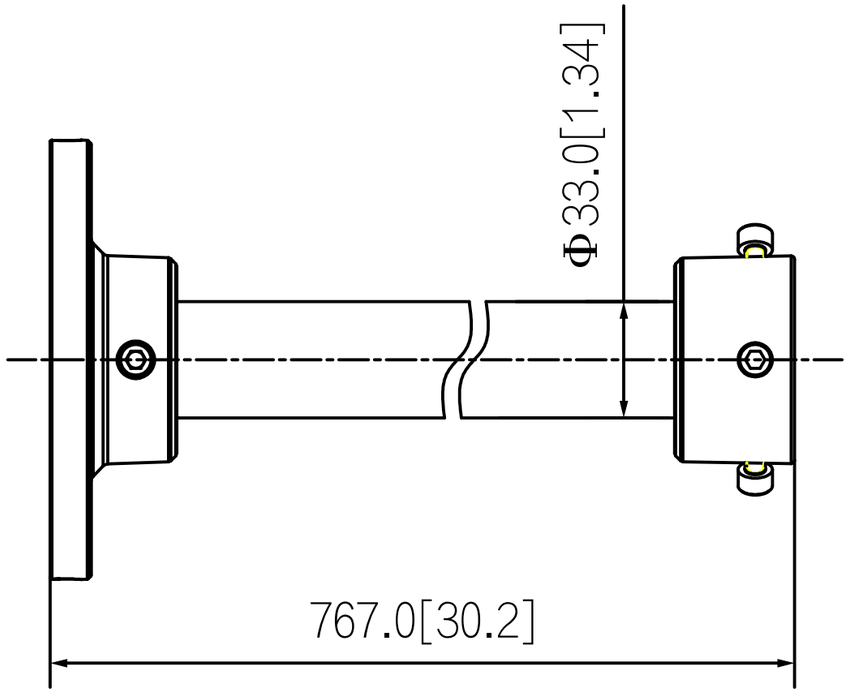
Φ33.0[1.34]
767.0[30.2]

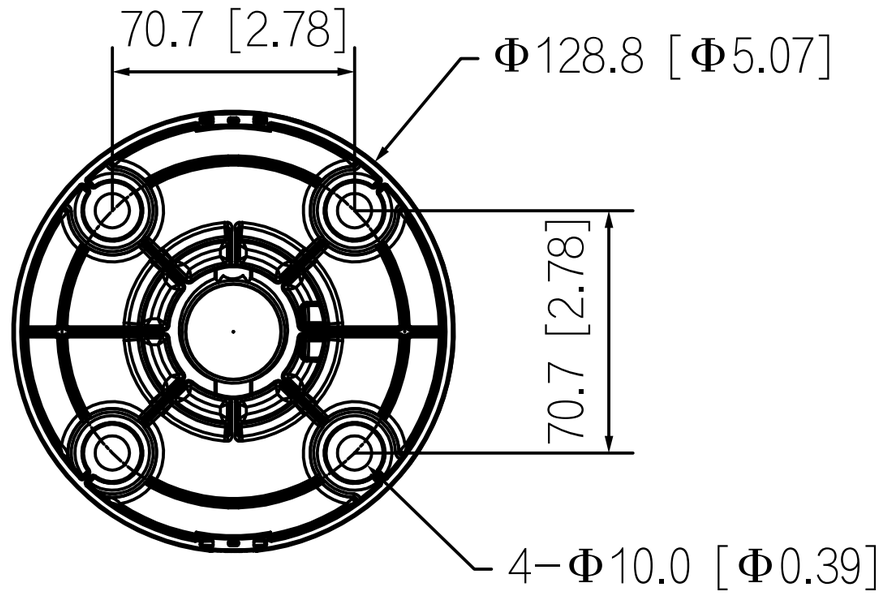
70.7 [2.78]
Φ128.8 [Φ5.07]
70.7 [2.78]
4−Φ10.0 [Φ0.39]

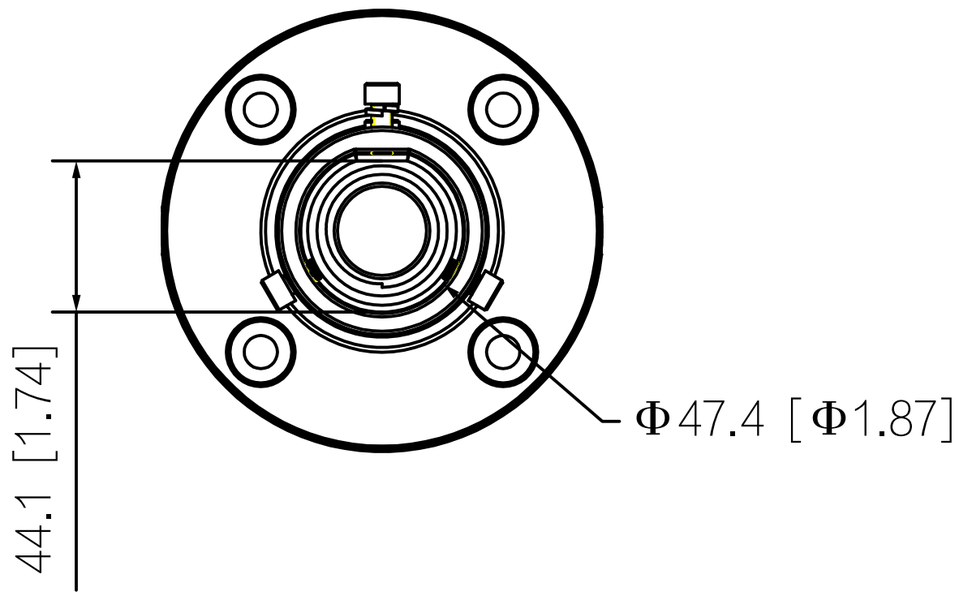
44.1 [1.74]
Φ47.4 [Φ1.87]