mm [inch]

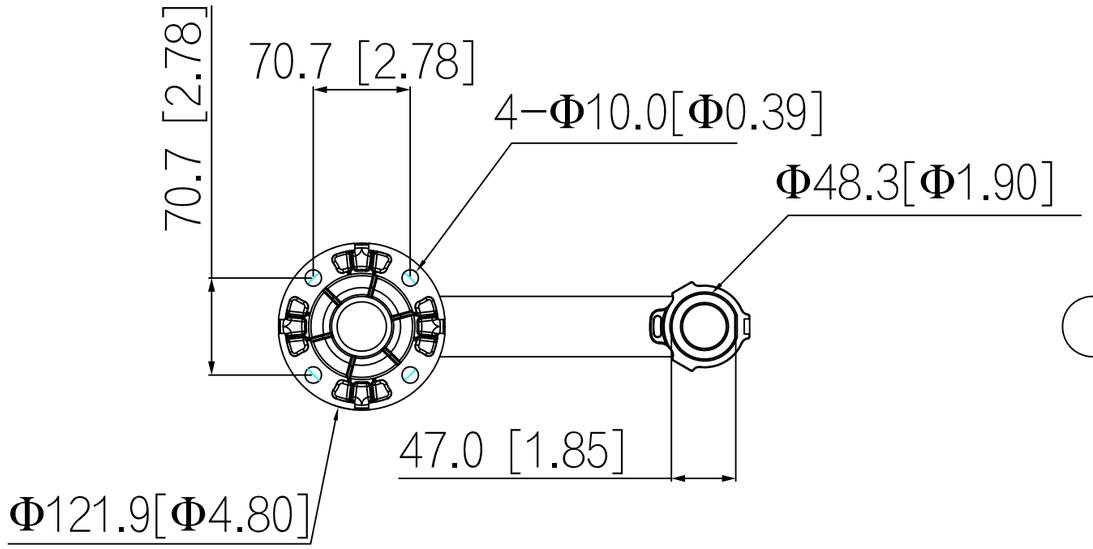
70.7 [2.78]
70.7 [2.78]
4−Φ10.0[Φ0.39]
Φ48.3[Φ1.90]
47.0 [1.85]
Φ121.9[Φ4.80]

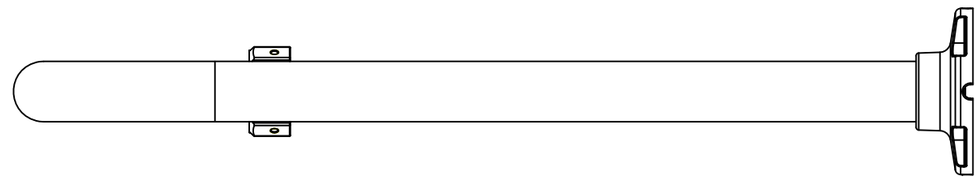

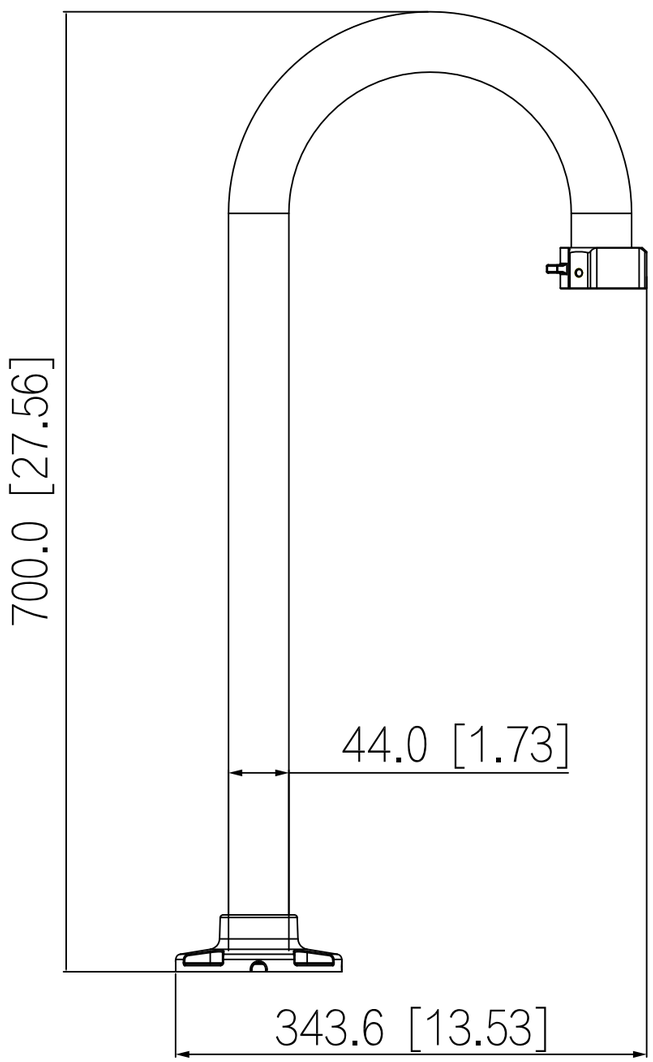
700.0 [27.56]
44.0 [1.73]
343.6 [13.53]